INTRODUCTION

In modern analog IC designs, minimizing power dissipation has become a critical requirement due to various factors such as demand for energy efficient and high performance electronic devices. Analog building blocks , especially operational amplifiers , play a vital role in many applications such as data converters, communication systems and signal processing circuits. Among various amplifier topologies , the telescopic amplifier is widely preferred for its high gain , simple structure and low power consumption compared to other architectures.

In this work, a telescopic amplifier design was selected from an IEEE research paper as a reference model. The chosen design was first implemented using Cadence Virtuoso with GPDK 45nm CMOS technology to replicate the original circuit behaviour. After reproducing the baseline results, the focus was shifted towards reducing power dissipation while maintaining the same functionality. Various power reduction techniques were applied to the original design. The impact of these techniques on overall amplifier performance was analyzed by the fall in power consumption.

This project demonstrated a practical approach to understand, implement and optimize analog circuit design by bridging theoretical knowledge with hands-on simulation using CMOS technology.

METHODOLOGY

This work focuses on the implementation of a telescopic operational transconductance amplifier (OTA) based on an existing IEEE research paper, followed by the application of low-power optimization techniques. The methodology is divided into two phases: reproduction of the reference design and power optimization.

A telescopic OTA architecture was selected from a published IEEE research paper based on its suitability for low-power analog applications. The reference design specifications, transistor dimensions, and biasing conditions were extracted from the base paper and used as the foundation for implementation.

The schematic was recreated by replicating the transistor-level design, including the differential input pair, cascode stages, and current mirror biasing network.All device dimensions (W/L ratios) and biasing parameters were set according to the reference paper to ensure accurate reproduction of the original design. The primary focus was on verifying power dissipation by measuring the total current drawn from the supply.The simulated power consumption was compared with the values reported in the reference paper to validate the correctness of the implementation.

Power dissipation was calculated as $\mathbf{P=V_{dd}\times I_{total}}$.

After successful replication of the base design, power reduction techniques were applied without altering the fundamental architecture.The techniques used are:

1. **Supply Voltage Reduction**: The supply voltage was reduced. Since power consumption is directly proportional to supply voltage, lowering V_{dd} resulted in immediate power savings.
2. **Header Switch Implementation**: A PMOS transistor was introduced between the supply voltage and the circuit. This technique limits the current flowing into the amplifier by controlling the effective supply path.
3. **Footer Switch Implementation**: A NMOS transistor was inserted between the circuit and ground. Similar to the header switch, it controls the current path, but from the ground side.
4. **Combined Optimization Approach**: All three techniques mentioned above were applied together to achieve maximum power reduction.

TELESCOPIC OPERATIONAL AMPLIFIER CIRCUIT - BASE PAPER IMPLEMENTATION

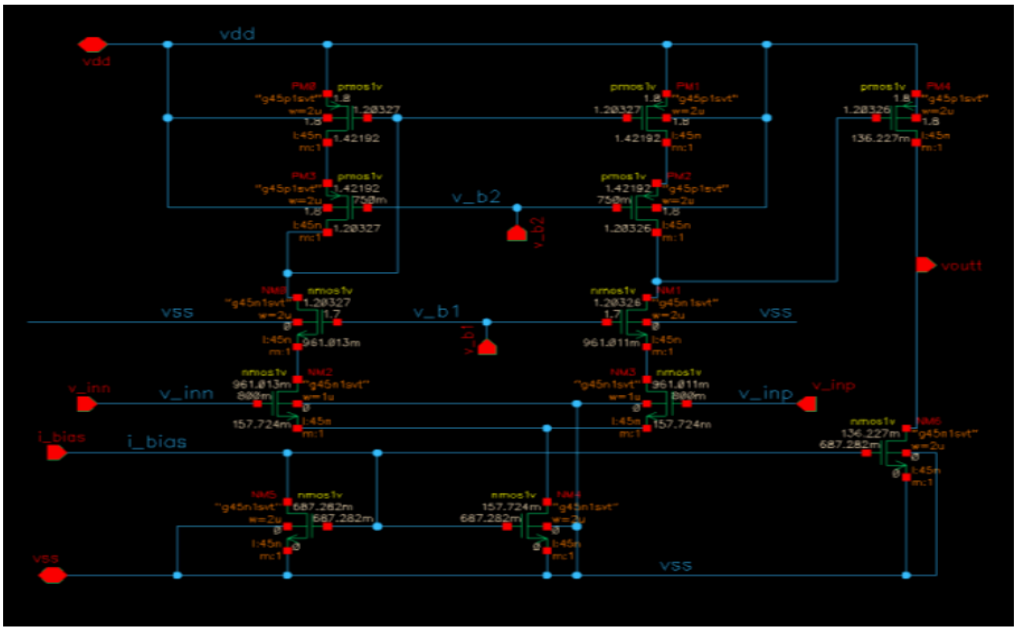

Figure 8 Schematic of OP-AMP using GPDK-45nm technology.

The circuit consists of a differential input stage formed by an NMOS pair that receives the input signals and converts them into current. This is followed by a cascode stage, using both PMOS and NMOS transistors, which enhances the gain by increasing the output resistance. A current mirror biasing stage provides the required bias currents and ensures proper operation in saturation. Finally, the signal is taken from a single-ended output stage, producing the amplified output voltage.

REPLICATION OF THE CIRCUIT

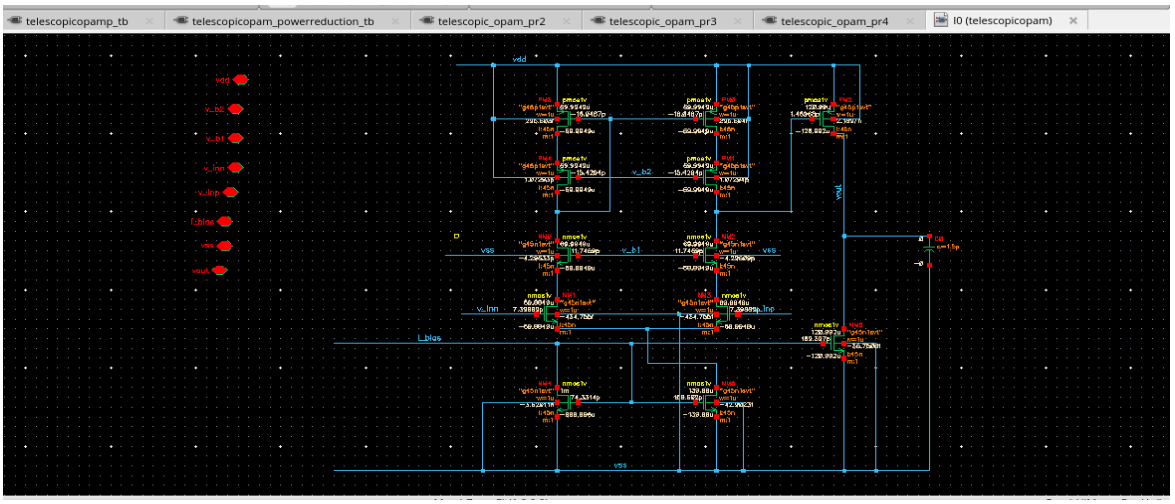

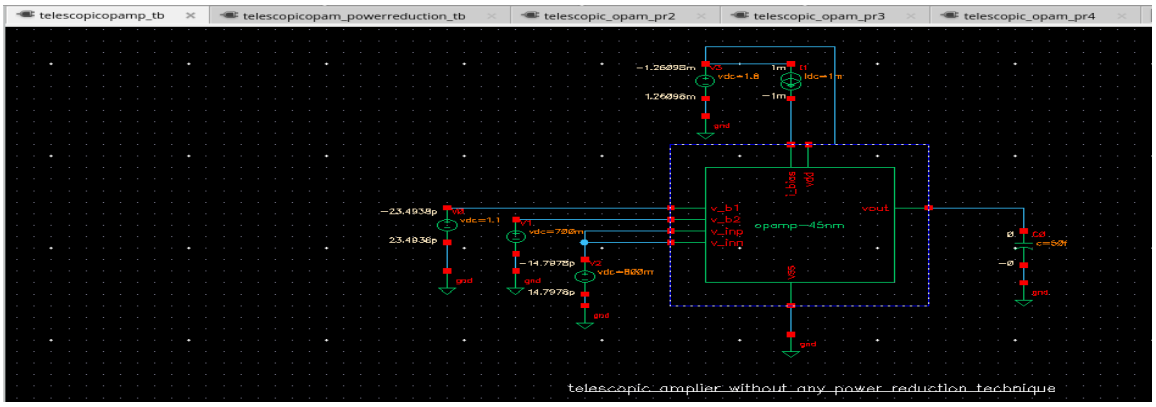

Implementation of the circuit referred from a research paper[1] using GPDK 45nm technology

TELESCOPIC OPERATIONAL AMPLIFIER USING LOW POWER TECHNIQUES-SCHEMATIC

1. **Voltage Scaling: Vdd =1 V**

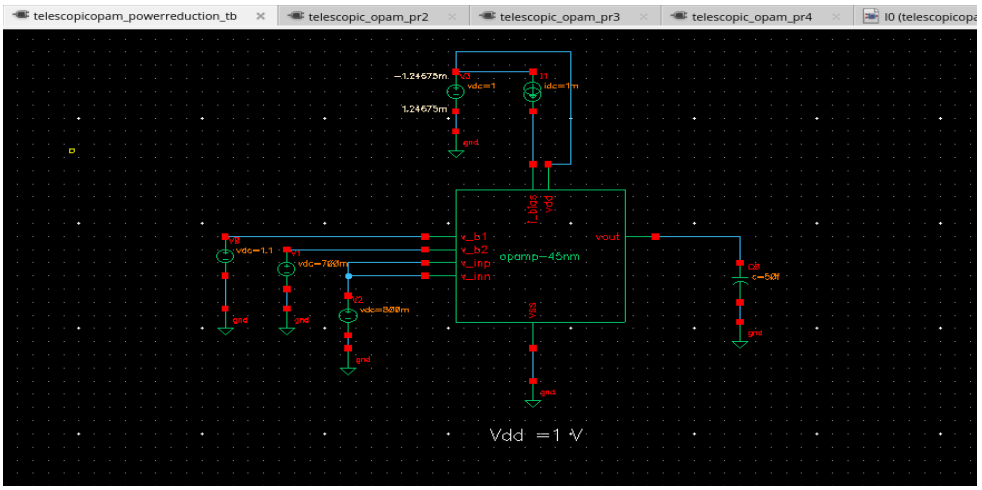

Power supply is reduced from 1.8V [1] to 1V

2. Header Switch

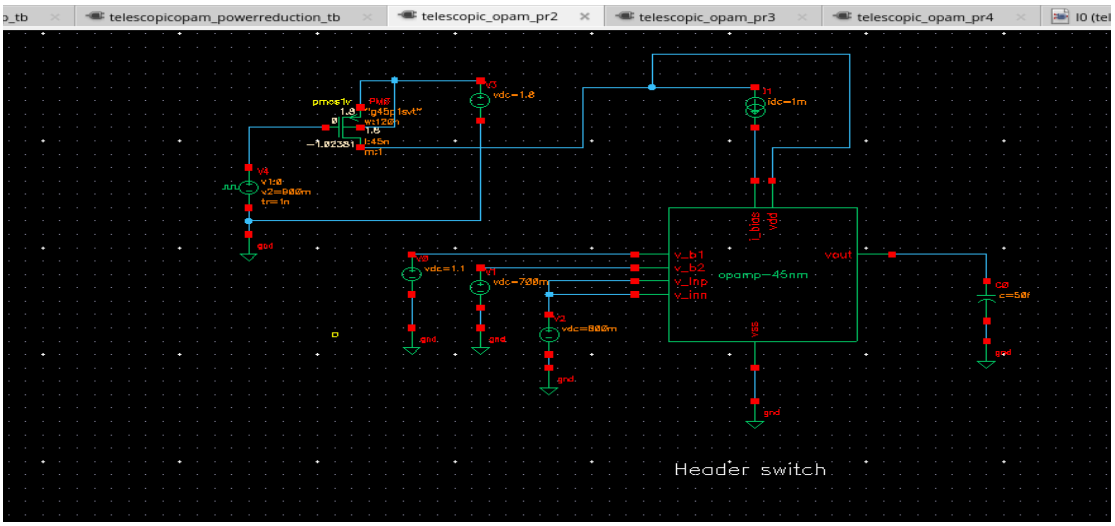

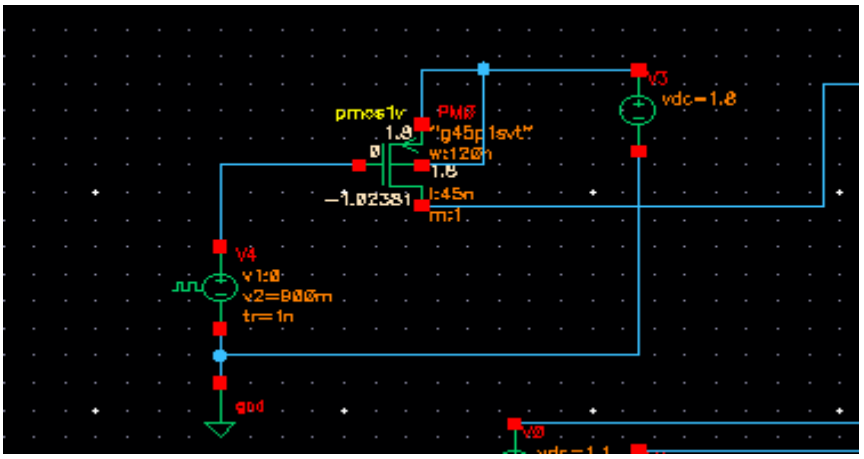

A PMOS transistor is used to control the power supply that is regulated using a voltage pulse source

3. Footer Switch

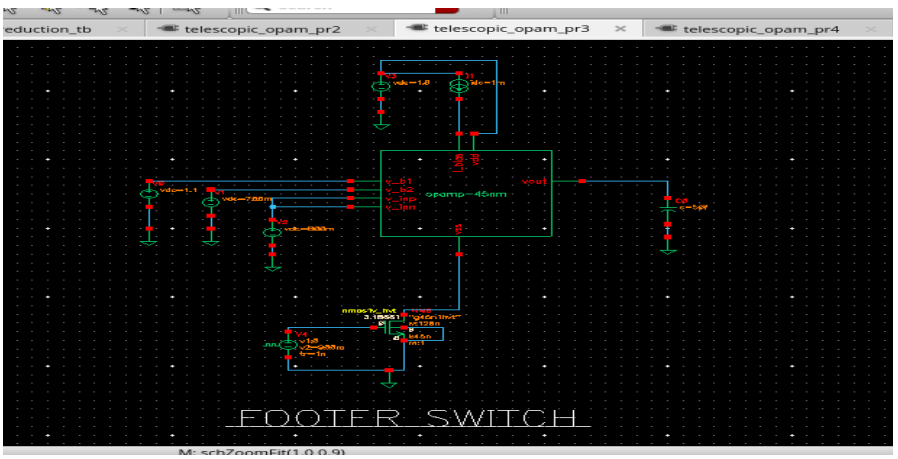

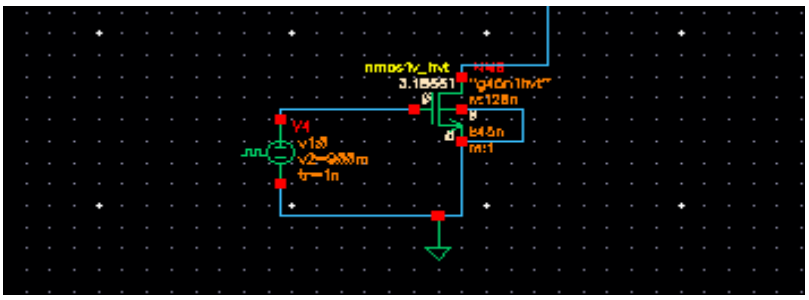

A NMOS transistor is used to reduce power dissipation by controlling the ground voltage

4. **Power source supply reduced to 1V, Header and footer switches in the same design**

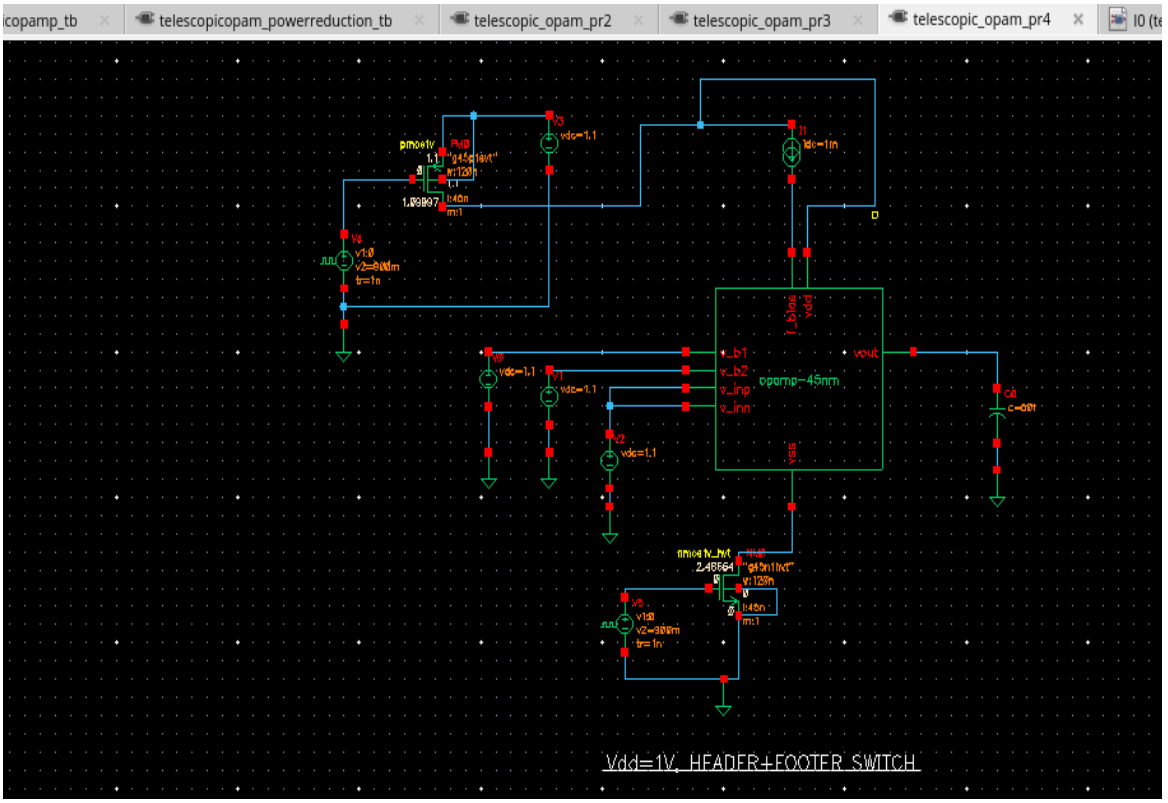

RESULTS

1. **Base paper power dissipation result**

A. Final Optimized Results

Parameter	SCL 180nm	GPDK 180nm	GPDK 45nm
Gain (dB)	111.52	114.0	198.26
Phase Margin (°)	70.58	72.4	71.1
UGF (MHz)	439.15	437.94	198.26
Power Dissipation (mW)	1.6	1.5	0.56

2. **Base paper circuit replication result**

ADE L (2) - pes1ug23ec919_lpvlsi telescopicopamp_tb schematic

Outputs

	Name/Signal/Expr	Value	Plot	Save	Save Options
1	average((IF("/V3/PLUS") ...				
2	V3/PLUS				all
3	average((IDC("/V3/PLUS"...				
4	(IDC("/V3/PLUS") * -1.8)	2.26977m	✓		

3. **Power optimization technique results**

   1.

ADE L (4) - pes1ug23ec919_lpvlsi telescopicopam_powerreduction_tb schematic

Outputs

	Name/Signal/Expr	Value	Plot	Save	Save Op
1	(IDC("/V3/PLUS") * -1)	1.24675m	✓		
2	V3/PLUS			✓	yes

2.

ADE L (5) - pes1ug23ec919_lpvlsi telescopic_opam_pr2 schematic

Outputs

	Name/Signal/Expr	Value	Plot	Save	Save
1	(IDC("/V3/PLUS") * -1.8)	220.503u	✓		

3.

ADE L (9) - pes1ug23ec919_lpvlsi telescopic_opam_pr3 schematic

Outputs

	Name/Signal/Expr	Value	Plot	Save	Save Op
1	(IDC("/V3/PLUS") * -1.8)	62.6973n	✓		

4.

ADE L (1) - pes1ug23ec919_lpvlsi telescopic_opam_pr4 schematic

Outputs

	Name/Signal/Expr	Value	Plot	Save	Sav
1	(IDC("/V3/PLUS") * -1)	4.30072n	✓		
2	V3/PLUS				yes

POWER DISSIPATION RESULT

Implementation	Power dissipation(Watts)
Base paper	560u
Base paper replication	22.26977m
Power supply reduction technique	1.24657m
Header switch implementation	220.50u
footer switch implementation	62.6973n
combined approach of the three techniques	4.30072n

Conclusion:

The implemented telescopic OTA was successfully replicated from the reference base paper, though the measured power dissipation (22.27 mW) was significantly higher than the reported value (560 µW), indicating practical implementation and scaling differences.

After applying power optimization techniques, a substantial reduction in power consumption was achieved. The supply voltage reduction technique reduced power to 1.246 mW, while the header switch further improved it to 220.5 µW. The most effective individual method was the footer switch, which reduced power to the nanowatt range (62.69 nW).

Finally, the combined application of all three techniques resulted in the maximum power reduction to 4.30 nW, demonstrating a drastic improvement over both the base implementation and individual techniques. This confirms that integrating multiple low-power strategies is highly effective for minimizing power dissipation in analog circuits without altering the core architecture.

REFERENCE:

[1]. M. Kumar and A. Raman, "Simulation-Based Performance Evaluation of Telescopic Op-Amps in SCL 180nm, GPDK 180nm, and GPDK 45nm CMOS Technologies," *2025 International Conference on Electronics, AI and Computing (EAIC)*, Jalandhar, India, 2025, pp. 1-7, doi: 10.1109/EAIC66483.2025.11101482.